NOTES: UNLESS OTHERWISE SPECIFIED

1. ALL DIMENSIONS ARE IN INCHES.
2. CATCH BASIN BODY MATERIAL: 14GA STAINLESS STEEL T304/T316
3. SPECIFYING ENGINEER IS RESPONSIBLE FOR CONCRETE ENCASEMENT AND REINFORCING BASED UPON APPLICATION AND LOCAL CODES.
4. REFER TO https://info.slotdrainsystems.com/installresources FOR INSTALLATION INSTRUCTIONS.

REVISIONS			
REV	DESCRIPTION	DATE	BY
0	INITIAL RELEASE – R0	11/20/2019	DK
1	UPDATED DRAWING LAYOUT & REBAR DETAILS	7/14/2021	DK

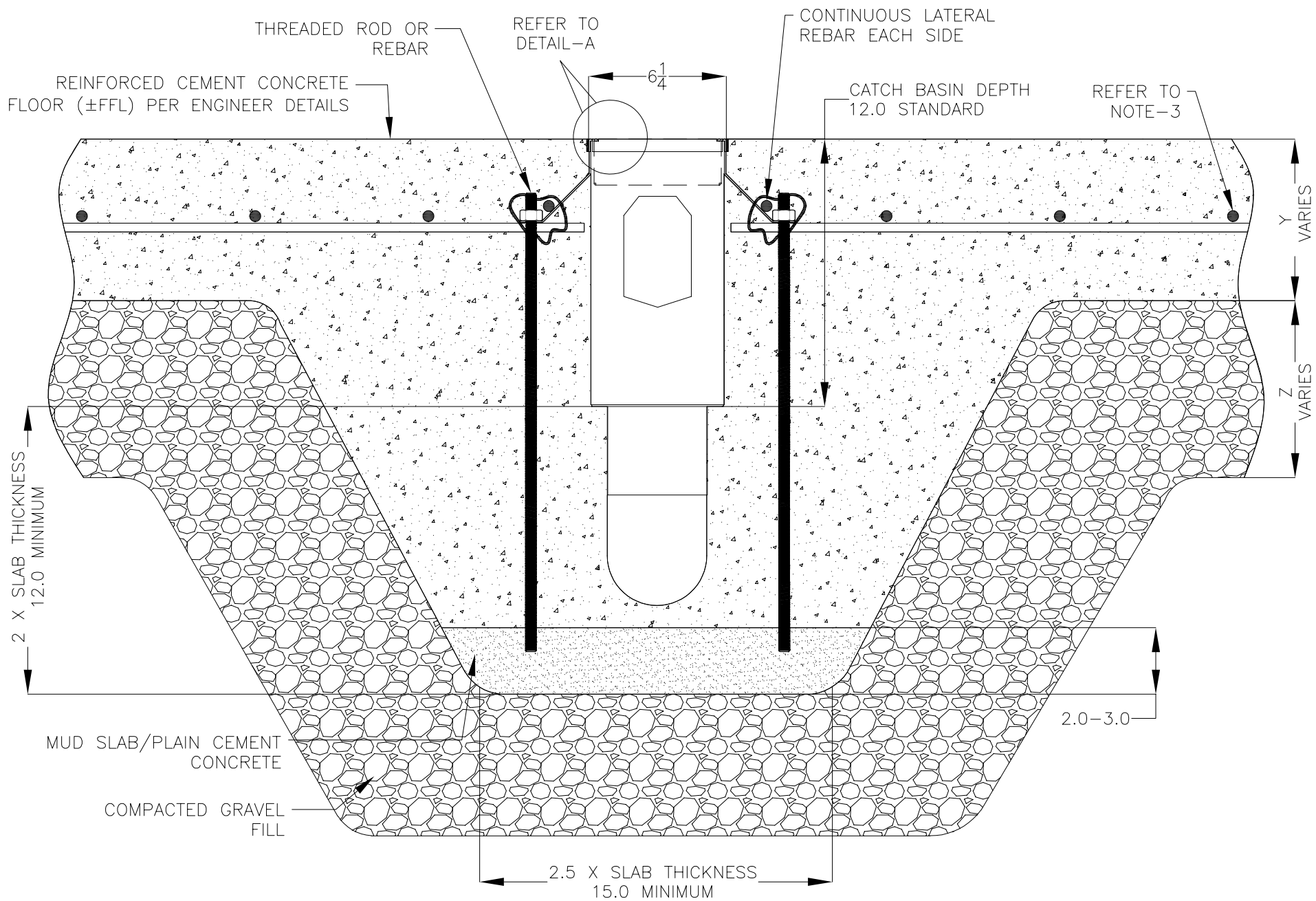

6X6X12 NON FG CATCH BASIN INSTALLATION DETAILS

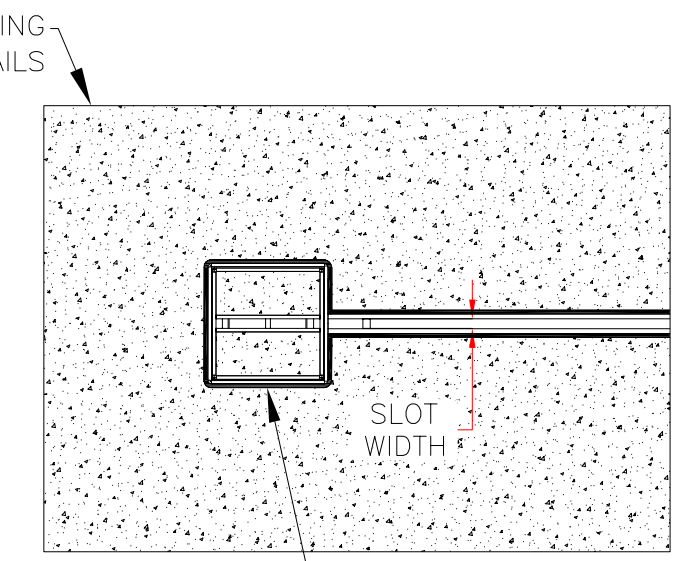

PLAN VIEW

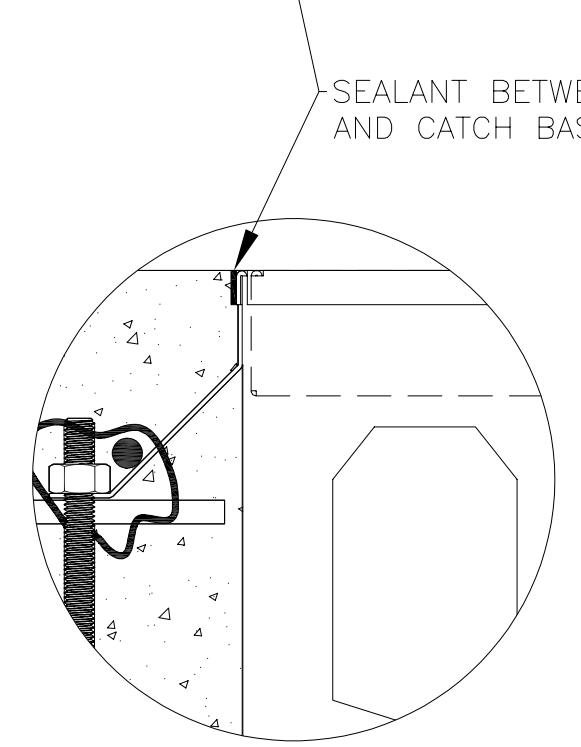

DETAIL–A

SLOTDRAIN® SYSTEMS
855.497.7508
info@slotdrainsystems.com
www.slotdrainsystems.com

ALL DRAWINGS ARE THE EXCLUSIVE PROPERTY OF SLOT DRAIN SYSTEMS. ANY REPRODUCTION IN PART OR IN WHOLE IS PROHIBITED WITHOUT PROPER CONSENT.

DRAWING TITLE				
CONCRETE FLOOR–NEW CONSTRUCTION INSTALLATION				
DRAIN SERIES				REV.
6X6X12 NON FG CATCH BASIN WITH PANLID				1
DWG NO.	SIZE	SCALE	SHEET	
IN–6X6X12PITPANLID–001–R1	B	NTS	1 OF 1	